Tiny Machine Learning for Li-ion Battery State of Health Estimation

Spyridon Giazitzis, Maciej Sakwa, Emanuele Ogliari
Department of Energy, *Politecnico di Milano*,
Milan, Italy
spyridon.giazitzis, maciej.sakwa, emanuelegiovanni.ogliari,
@polimi.it

Susheel Badha, Filippo Rosetti
Infineon Technologies,
Villach, Austria
susheel.badha, filippo.rosetti
@infineon.com

2024 IEEE 22nd Mediterranean Electrotechnical Conference (MELECON) | 979-8-3503-8702-5/24/$31.00 ©2024 IEEE | DOI: 10.1109/MELECON56669.2024.10608784

***Abstract*—The high rise of Renewable Energy Sources (RES) and the stochastic nature of weather conditions cause a need for battery integration into energy storage systems. Sophisticated Battery Management Systems (BMS) are required to supervise and compute the key parameters among which many are not directly measurable using standard sensors. Many data-driven methods are frequently preferred for their estimation due to their superior accuracy, minimal energy consumption, and straightforward implementation on cloud platforms or Internet of Things (IoT) devices. The primary focus of this research is the development of compact, data-driven models tailored for battery State of Health (SoH) estimation prioritizing efficiency in terms of memory and power requirements, rendering them well-suited for integration into IoT devices. Specifically, the target device for implementation is the Infineon Cypress CY8CPROTO-062S3-4343W. The development process entailed offline training of a compact Convolutional Neural Network (CNN) and an Artificial Neural Network (ANN) utilizing a comprehensive dataset derived from five distinct batteries. The on-device deployment and quantization of the models was performed employing the ModusToolBox Machine Learning (MTB-ML) software provided by Infineon. The tests demonstrate satisfactory results for both selected models, with notably good accuracy, particularly in the initial phases of the battery life cycle. Regarding computational load, the ANN exhibits a distinct advantage over the more intricate CNN model.**

***Index Terms*—State of Health, TinyML, Battery, Deep Learning, IoT**

I. Introduction

Nowadays, there is a growing interest in advancing the electrification of the transportation sector, driven by various policies aimed at promoting the adoption of Large Scale Renewable Energy Sources (LS-RES) [1] while reducing reliance on fossil fuels. Addressing the disparity between power generation from RES and the energy demand [2], [3] necessitates an increase in the capacity of Lithium-Ion (Li-ion) batteries, making them a major point of interest for numerous researchers [4]. However, beyond the mere development of batteries, it is imperative to focus on the creation of sophisticated and intelligent BMS. These systems are pivotal in enhancing energy efficiency and ensuring battery protection, encompassing cell charge balancing, temperature monitoring, and current and voltage regulation, and should be widely used in Electric Vehicles (EVs).

BMS should be able to estimate several important parameters, such as State of Charge (SOC), State of Charge (SOH), and Remaining Useful Life (RUL), that can not be measured directly through sensors [5]. Precise estimation of a battery's SOH holds significant importance in acquiring accurate data regarding remaining capacity, thereby preventing overcharging and power failures, prolonging battery life, and boosting overall battery performance. This accuracy facilitates intelligent management of battery packs, ultimately extending their longevity [6].

The SOH is defined as a percentual ratio of the maximum available capacity of the battery in a specific degradation state, to the maximum nominal capacity. [7]:

$$SOH = \frac{Q_{max}(cycle)}{Q_{max}(nominal)} \cdot 100\% \tag{1}$$

With the advancement of computational capabilities and increased availability of historical data, data-driven methods have emerged as increasingly preferred solutions for SOH estimation [8], [9]. A plethora of data-driven approaches have been explored, encompassing methodologies that leverage both Machine Learning (ML) techniques such as Gaussian Process Regression [10] or Support Vector Machines [11], and Deep Learning (DL) involving Neural Networks (NN). Comprehensive reviews of these methodologies, coupled with thorough performance analyses, can be accessed in the following sources: [12]–[14].

A. Tiny ML as state-of-the-art in SOH evaluation

Tiny Machine Learning (TinyML) has emerged as a promising frontier in the data-driven estimation of SOC, SOH, and RUL, leveraging embedded edge devices to create intelligent systems capable of real-time evaluation of battery's states and overall performance [15]. Designing, developing, and optimizing ML models on low-power IoT devices presents

This study was carried out within the MOST – Sustainable Mobility Center and received funding from the European Union Next-GenerationEU (PIANO NAZIONALE DI RIPRESA E RESILIENZA (PNRR) – MISSIONE 4 COMPONENTE 2, INVESTIMENTO 1.4 – D.D. 1033 17/06/2022, CN00000023). This manuscript reflects only the authors' views and opinions, neither the European Union nor the European Commission can be considered responsible for them.

Authorized licensed use limited to: International Institute of Information Technology-Raipur. Downloaded on January 27,2026 at 10:50:39 UTC from IEEE Xplore. Restrictions apply.

various benefits, including enhanced energy efficiency, affordability, reduced latency, and the ability to conduct local data processing, thereby mitigating unnecessary data transfers [16]. However, challenges arise from the unpredictable operating environments and energy supply conditions characteristic of such devices [17]. Moreover, the task of SOH estimation is inherently complex and multivariate, influenced heavily by factors such as battery type, discharge and charge profiles, temperature, and current aging state. Additionally, constraints on memory and computational power on IoT devices impose limitations on the implementation of ML models and algorithms [18], [19]. Therefore, optimization is crucial to develop TinyML models that are compact enough to operate on low-power IoT devices while robustly handling the complexities of SOH estimation across different scenarios. Although ML and DL models utilized for offline SOH prediction typically yield satisfactory results with mean errors within a range of 1% [20], the realm of IoT implementations remains relatively unexplored. Nonetheless, IoT implementations are gaining traction due to their promising performance capabilities. Prior research on battery state estimation using TinyML models on IoT devices demonstrates promising results. For instance, Crocioni et al. achieved good SOH prediction with a CNN-GRU model, even after quantization [21]. Mazzi et al. identified CNNs and GRUs as suitable models for SOC estimation, achieving low error rates with CNNs using TFLite or STM32 quantization [22]. However, limitations exist, such as the use of limited data (single cycle).

B. Paper objective

This paper uses a novel private battery dataset, which will serve as the basis for training and evaluating two NN architectures: a CNN and an ANN. The models will undergo offline training on a desktop system and subsequently undergo quantization and optimization for deployment on a target IoT device. The conversion process will be facilitated using the MTB-ML software, and the quantized model will be implemented on a PSoC6 (CY8CPROTO-062S3-4343W) target device. The information for the new battery dataset was acquired through testing a broad range of charge and discharge cycles, which will be analyzed later, thereby enhancing the assessment of the potential for robust IoT implementations of SOH predictions. This study is connected to an ongoing project covered by the MOST program and as such fulfills some of its main objectives such as the development of sustainable vehicular transportation using highly performing modern computational techniques.

The paper is structured as follows: first, the used datasets structure and design pipelines are described in section II, later the methodology is described in section III followed by the results and discussion in section IV. Lastly, a conclusion and possible future research topics are presented in V.

II. Case Study

A. Dataset

For most SoH estimation methods, researchers traditionally utilize openly available datasets like Oxford [23] or NASA [24] Li-ion Battery Aging Dataset. However, this study utilizes a new private dataset containing recordings from 6 LG 2.5Ah 18650 NMC batteries across various temperature ranges. It includes dynamic discharging profiles such as UDDS, US06, and LA92 driving cycles, as well as their random combinations (named Mixed 1 through Mixed 6). For recharging, constant-current constant-voltage (CC-CV) profiles were used. Furthermore, constant-current (CC) discharge cycles were used, approximately every 20-30 cycles, for the capacity measurements. The total dataset contains over 7.5 million samples. Detailed parameters are provided in Table I and at [25].

TABLE I
Datasets Main Characteristics

Characteristics	Dataset
Battery Type	6 LG 2.5Ah 18650 NMC
Testing Equipment	Neware battery tester
Temperature	35°C
Features	ICA, V
Test Cycles	CC-CV Charge Cycles

Data from the first 5 cells are exclusively used for training the designed Deep Learning (DL) models, while data from cell 6 is reserved for testing. For those procedures, data from CC-CV charging cycles were utilized. Specifically, voltage and Incremental Capacity Analysis (ICA) curves were utilized as input features to train the models. ICA can be defined as:

$$ICA = \frac{dQ}{dV} \tag{2}$$

ICA curve is calculated by differentiating the charge capacity with respect to the cell voltage and then applying a Savitzky-Golay filter to reduce the spikes and fluctuations [20]. The features are later normalized in their respective min-max ranges before being fed to the models. An example of the input features of ICA and the related Voltage can be seen in Fig. 1, where 9 curves with different degradation states (different cycle number), are presented.

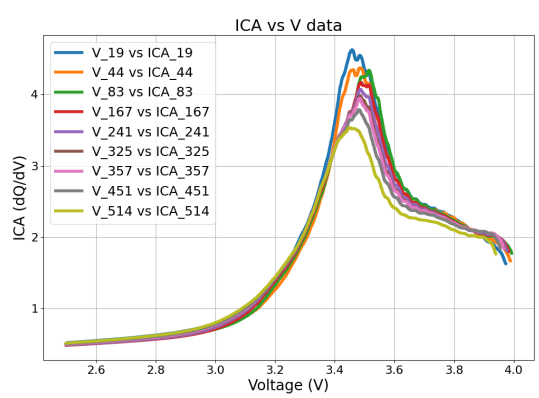

Fig. 1. The ICA as a function of Voltage curves that are used as one of the model inputs.

Before training and testing the design models the used features undergo normalization in their respective min-max ranges. This procedure ensures higher performance stability of

Authorized licensed use limited to: International Institute of Information Technology-Raipur. Downloaded on January 27,2026 at 10:50:39 UTC from IEEE Xplore. Restrictions apply.

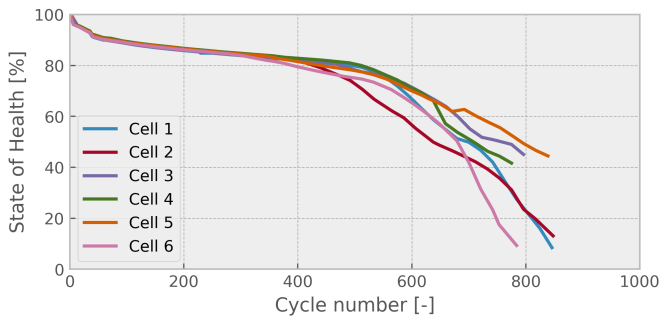

Fig. 2. True SOH curves for the batteries present in the training and test datasets.

the developed models by keeping similar accuracy levels while also positively impacting the training and inference time.

The explored SOH values range between 100% and 80% as batteries employed in Electric Vehicles (EVs) are considered to reach their End of Life (EoL) after passing the 80% SOH threshold [26]. The entire SOH range of the utilized battery dataset, for all six battery cells, is depicted in 2. On the contrary, the voltage range is set between 3.1V to 3.9V (instead of the full range of 2.5V to 4.2V), as this range fully covers the most meaningful information about the battery behavior that can be extracted from the dataset. By applying the aforementioned method, the training and testing time can be reduced significantly, and the model's robustness increased.

B. IoT device

The designated target device for ML and DL model deployment is the CY8CPROTO-062S3-4343W PSoC 62S3 (see Fig. 3), an economical hardware platform facilitating the design and debugging of PSoC6 MCUs. Key parameters of this device are summarized in Table II.

TABLE II
MAIN CHARACTERISTICS OF THE TARGET DEVICE.

Characteristics	Values
MCU	PSoC 6
Operating voltage range	1.8-3.3 (V)
Flash memory	512 KB
SRAM	256 KB
Wi-fi + Bluetooth module	Murata LBEE5KL1DX module (based on CYW4343W combo device)

For the purpose of model deployment, the MTB-ML software by Infineon has been employed. It offers a robust configurator that enables the import of any pre-trained DL models and subsequently the generation of the necessary embedded variants of the models in the form of C-code and binary files. Additionally, it facilitates the validation of optimized models and furnishes resource requirements such as the number of cycles necessary to execute the inference machine, the memory size of the neural network model, and the working memory for inference. Table III provides a brief overview of the primary supported features of MTB-ML

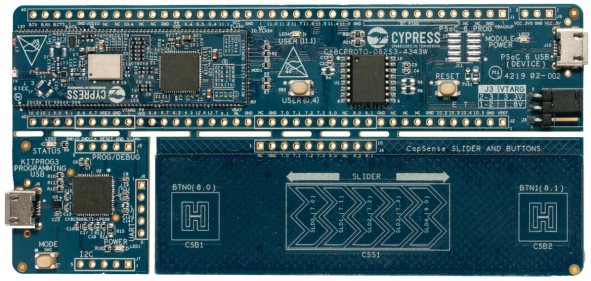

Fig. 3. CY8CPROTO-062S3-4343W PSoC 62S3 target device board.

TABLE III
MAIN SUPPORTED FEATURES OF THE CY8CPROTO-062S3-4343W PSOC 62S3 TARGET DEVICE BOARD.

Features	Values
Formats	TFLite and H5
Inference Engines	TensorFlow Lite for microcontrollers Infineon Inference Engine
Core NN Kernels	LSTM, GRU, MLP, Conv1d, Conv2d
Support NN Kernels	flatten, dropout, reshape, input layer
Activations	relu, softmax, sigmoid, linear, tanh
Input Data Quantization level	32-bit float, 16/8-bit integer
NN Weights Quantization level	32-bit float, 16/8-bit integer
Cycle and Memory estimation	Yes

C. Evaluation Metrics

To extract meaningful comparisons and assess the models effectively, a range of evaluation metrics were utilized. Initially, MTB-ML employ various metrics concerning the model's computational and memory demands, encompassing metrics like the number of cycles, model memory, scratch memory, and persistent memory. Persistent memory, which persists across frames and is utilized by subsequent frames, along with scratch memory, which is discarded after each frame processing, are both stored in SRAM, the temporary memory. Furthermore, the mean absolute error (MAE) was employed to evaluate the model's performance.

$$MAE = \frac{1}{n}\sum_{j=1}^{n}|SOH_i - \hat{SOH}_i| \tag{3}$$

Where SOH_i and $\hat{SOH}_i$ are each model's real value and predicted values, respectively.

III. MODEL DEFINITION

A. Tested models

Two distinct models were trained and tested, utilizing the dataset outlined in Section II. For each model, the hyperparameters were optimized via the Bayesian Optimization method [27]. Nonetheless, when it comes to TinyML applications, the array of accessible hyperparameters and activation functions is constrained due to quantization and certain software limitations. Both models utilized many-to-one architecture which is presented in Fig. 4. The optimal value, for the time window value, was 1900 seconds according to a trial-by-error analysis,

Authorized licensed use limited to: International Institute of Information Technology-Raipur. Downloaded on January 27,2026 at 10:50:39 UTC from IEEE Xplore. Restrictions apply.

which means that whenever 1900 samples of charging data are acquired, there will be an estimation of the SoH value.

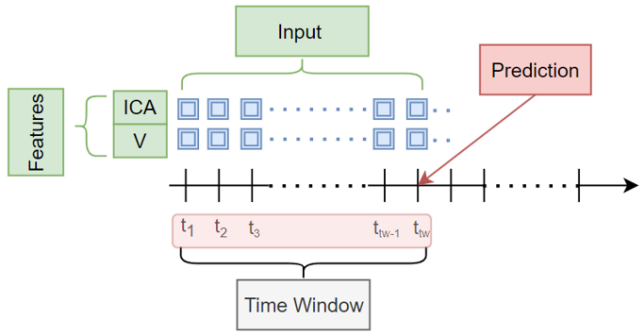

Fig. 4. Model architecture using 2 input features - a time window of 1900 seconds of the studied features is used to predict the SOH value at the 1900th second.

- A standard benchmark model for deployment was an ANN with its characteristic fully connected feed-forward architecture. ANNs typically have multiple neuron layers: an input layer, one or more hidden layers, and an output layer. These layers process the input data sequentially, applying transformations defined by the equation:

$$h_i = g_i(\mathbf{W}_i^T x + b_i) \tag{4}$$

  Here, h_i represents the output of the i-th layer, $g_i(z)$ denotes the activation function, and W_i and b_i represent the weights and bias matrices respectively. ANN configuration involves defining the number and size of hidden layers, choosing activation functions, and setting input/output dimensions based on data and desired output. ANNs are popular for their simplicity and adaptability. In this study, two ANNs were evaluated. The first (ICA data only) had 6,529 parameters with 5 dense layers (16, 16, 64, 32, 1 neurons). The second (ICA + voltage data) had 7,521 parameters with 4 dense layers (16, 16, 64, 1 neurons). All layers used the ReLu activation function due to software limitations.
- The CNN is widely recognized for its effectiveness in extracting features from complex inputs, such as images or audio recordings [28]. This procedure combines convolution and pooling techniques. Initially, a kernel traverses the input, conducting element-wise multiplication (or convolution) with its corresponding segments to produce a feature map (as illustrated in Fig. 5). Following this, the feature map undergoes dimensionality reduction through the pooling layer. The extracted features can subsequently be incorporated into various model architectures. Similar to ANN, two CNN models were constructed, differing in the number of layers, neurons, and total trainable parameters. The first CNN, trained exclusively on ICA data, comprises 28,433 trainable parameters, featuring 2 Conv1d and 2 MaxPooling1d layers, along with 6 dense layers consisting of 16, 16, 64, 16, 32, and 1 neuron respectively. Meanwhile, the second CNN, incorporating both ICA and voltage data, encompasses 49,633 trainable parameters, with 2 Conv1d and 2 MaxPooling1d layers, and 4 dense layers with 32, 16, 16, and 1 neurons respectively. Additionally, due to software constraints, all layers utilized the ReLU activation function.

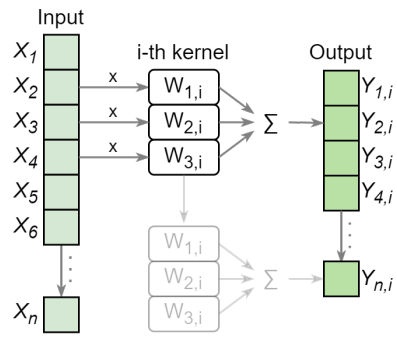

Fig. 5. Convolution operation.

B. Quantization

Quantization is used as a method to mitigate the computational and memory requirements involved in running inference for ML and DL models. It commonly involves reducing the precision of neural network weights and input data, converting them from high-precision bits to lower-precision formats like 8-bit integers. This technique offers numerous benefits, including a reduction in the model's memory footprint. This reduction is crucial for deploying models on embedded devices with limited computation and memory resources, such as smartphones, smart sensors, and other IoT devices. Additionally, quantization leads to improved inference times due to reduced computational complexity and enhances energy efficiency by lowering power consumption, making it particularly suitable for real-time applications. In our study, we employ quantization using MTB-ML software, which provides access to two distinct quantization engines: the standard *TFLM* from the TensorFlow Deep Learning ecosystem and *IFX* from Infineon's software. Further details are available in Table IV

TABLE IV
AVAILABLE QUANTIZATION TYPES IN MODUS TOOLBOX SOFTWARE. DIFFERENT INFERENCE ENGINES ALLOW FOR VARIOUS TYPOLOGIES OF QUANTIZATION OF INPUT DATA AND MODEL WEIGHTS.

Quantization Type	Input Data	Weights	Inference Engine
int8x8	8-bit f.p.[1]	8-bit f.p.	IFX, TFLM
int16x8	16-bit f.p.	8-bit f.p.	IFX
int16x16	16-bit f.p.	16-bit f.p.	IFX
float	fl.p.[2]	fl.p.	IFX, TFLM

The MTB-ML software possesses the capability to produce a comprehensive report encompassing the aforementioned types of quantization, along with details regarding CPU cycles and the necessary memory for each model. Ordinarily, flash memory is utilized to store model weights and parameters,

[1]tf.p. - fixed point
[2]*fl.p.* - floating point

Authorized licensed use limited to: International Institute of Information Technology-Raipur. Downloaded on January 27,2026 at 10:50:39 UTC from IEEE Xplore. Restrictions apply.

whereas SRAM is employed for storing temporary data essential for inference processing.

IV. Results and Discussion

Two CC-CV charging profiles, in different degradation states (around the 100th and 400th cycle), were selected to compare the accuracy and hardware requirements of the chosen models utilizing the MTB-ML software. Going back to Fig. 2, it can be observed that all the cells reach 80% SoH around the 400th cycle. This point is often considered a cut-off (also known as knee-point) when the batteries are no longer usable for their primary objective and should be transferred to their desired second-life use. It is noticeable that their behavior becomes unstable rendering the SOH values unpredictable. Therefore, by testing the SOH estimation algorithm around the 100th and 400th cycles a comparison between performance in stable and nearly unstable conditions can be obtained.

The trained models have been quantized (in all 3 available quantization types) and tested on a desktop and subsequently transferred to the target device and tested therein to effectively estimate the performance of the trained models both in terms of prediction accuracy and computational burden. The detailed results of the test can be observed in Tab. V.

Considering the computational burden, as can be expected the quantization type has a high impact on the model and data memory footprint with the more restrictive quantization models (such as int16x8) occupying proportionally less flash memory and more restrictive data reduction (such as int8x8) occupying proportionally less SRAM memory while running inference. Conversely, less reduced models (int16x16) exhibit superior performance in terms of CPU clock usage, necessitating fewer operations to execute the inference process. Moreover, there is a substantial difference in resource usage between the tested ANN and CNN architectures, with the CNN utilizing over 4 times more permanent memory to store the weights. This is directly proportional to the number of trainable parameters identified in each of the designed architectures.

However, despite the benefits of reduced memory and clock usage, the quantization comes at a penalty of reduced accuracy compared to the baseline model. This is particularly visible in the case of the int8x8 quantization as the achieved MAE deviates far from the levels achieved not only by the reference model but also by the less reduced quantized variant indicating a complete failure in achieving an accurate prediction. This statement holds true for all the tested model typologies suggesting that the issue is more related to the reduction in data precision than the model itself.

Experimental validation of the model accuracy has been performed by uploading the pre-trained and quantized models to the target CY8CPROTO-062S3-4343W PSoC 62S3 device via the MTB-ML software. In Tab. VI a comparison of performance between the desktop version and the on-target version of the same models in int16x16 quantization is presented. It can be remarked that in most cases the variation in achieved MAE is negligible. Despite being tested only on the int16x16 models, it is inferred from [21] that this is typical behavior, and therefore there is no further need to check other quantization variants.

Considering the model performance it is visible that the addition of a secondary feature in the form of the Voltage corresponding to the ICA measurement has a beneficial impact on the accuracy of SOH inference.

In terms of battery cycle performance, for cycle 398 the models generally exhibit poorer performance compared to cycle 103, as illustrated in Tab V. This discrepancy suggests that varying levels of battery degradation impact the accuracy of the models and as the instability of the measured SOH grows, the model error also grows.

Furthermore, when comparing the performance of CNN and ANN, it is observed that CNN performance is comparable to ANN but highly dependent on the specific use case. However, it is important to note that ANN is generally more recommended due to its significantly lower computational load. This recommendation stems from the efficiency of ANN in terms of computational resources, making it a more practical choice for real-world applications where computational resources may be limited such as smart IoT measurement devices.

V. Conclusion

This paper presents a comprehensive case study on the IoT implementation of DL algorithms for SOH estimation. The attained results, considering the accuracy of the trained models, memory utilization, and computational load, are highly satisfactory and provide a solid foundation for further exploration in this field. Future research endeavors could focus on evaluating other prevalent DL architectures commonly employed for SOH prediction, such as LSTM and GRU, or combined architectures, that employ CNN models for feature extraction, such as CNN-LSTM and CNN-GRU. Furthermore, forthcoming studies could extend the research by incorporating additional steps and secondary prediction models aimed at tasks like RUL estimation which is generally, an SOH trajectory prediction. Additionally, integrating model-based approaches that target states crucial for prognostics, diagnostics, and overall battery health management could be explored. Lastly, there is potential for utilizing more complex datasets in future investigations, encompassing diverse charging protocols, and battery types. This approach could significantly enhance the model's performance and robustness by providing a broader range of data for analysis and training.

References

[1] B. Ranjgar and A. Niccolai, "Large-scale rooftop solar photovoltaic power production potential assessment: A case study for tehran metropolitan area, iran," *Energies*, vol. 16, no. 20, p. 7111, 2023.

[2] M. Wood, E. Ogliari, A. Nespoli, T. Simpkins, and S. Leva, "Day ahead electric load forecast: A comprehensive lstm-emd methodology and several diverse case studies," *Forecasting*, vol. 5, 2023.

[3] S. M. Miraftabzadeh, M. Longo, and M. Brenna, "Knowledge extraction from pv power generation with deep learning autoencoder and clustering-based algorithms," *IEEE Access*, vol. PP, pp. 1–1, 01 2023.

[4] P. Eleftheriadis, S. Giazitzis, S. Leva, and E. Ogliari, "Data-driven methods for the state of charge estimation of lithium-ion batteries: An overview," *Forecasting*, vol. 5, no. 3, pp. 576–599, 2023.

Authorized licensed use limited to: International Institute of Information Technology-Raipur. Downloaded on January 27,2026 at 10:50:39 UTC from IEEE Xplore. Restrictions apply.

TABLE V
DETAILED PERFORMANCE ANALYSIS - FOR EACH MODEL AND QUANTIZATION TYPE, THE COMPUTATIONAL AND MEMORY BURDEN IS LISTED ALONG WITH THE ACHIEVED PERFORMANCE IN TERMS OF MAE

Model	Train Features	Quantization Type	CPU Cycles (thousands)	Model Memory (B)	Scratch Memory (B)	MAE [%] Cycle 103	MAE [%] Cycle 398
CNN	ICA	int16x16	1886	57116	18972	0.05	0.43
		int16x8	2450	28660	18972	0.09	0.39
		int8x8	2169	28660	9948	2.8	3.03
ANN	ICA	int16x16	22	13130	768	0.49	0.83
		int16x8	35	6591	768	0.36	0.42
		int8x8	25	6591	516	3.58	2.25
CNN	ICA, V	int16x16	1144	99496	10000	0.08	0.03
		int16x8	1525	49842	10000	0.15	0.2
		int8x8	1316	49842	5488	3.58	4.6
ANN	ICA, V	int16x16	25	15104	1148	0.15	0.19
		int16x8	38	7574	1148	0.06	0.01
		int8x8	28	7574	704	2.02	2.25

TABLE VI
DETAILED LOOK AT MAE [%] COMPARISON FOR INT16X16 QUANTIZATION

	Cycle 103		Cycle 398	
	Desktop	Target	Desktop	Target
CNN (ICA)	0.05	0.00188	0.43	0.428
ANN (ICA)	0.49	0.49	0.83	0.831
CNN (ICA, V)	0.08	0.0775	0.03	0.0252
ANN (ICA, V)	0.15	0.148	0.19	0.19

[5] S. Hussain, M. U. Ali, S. H. Nengroo, I. Khan, M. Ishfaq, and H.-J. Kim, "Semiactive hybrid energy management system: a solution for electric wheelchairs," *Electronics*, vol. 8, no. 3, p. 345, 2019.

[6] S. Wang, S. Jin, D. Bai, Y. Fan, H. Shi, and C. Fernandez, "A critical review of improved deep learning methods for the remaining useful life prediction of lithium-ion batteries," *Energy Reports*, vol. 7, pp. 5562–5574, 2021.

[7] R. Xiong, L. Li, and J. Tian, "Towards a smarter battery management system: A critical review on battery state of health monitoring methods," *Journal of Power Sources*, vol. 405, pp. 18–29, 2018.

[8] S. M. Miraftabzadeh, M. Longo, F. Foiadelli, M. Pasetti, and R. Igual, "Advances in the application of machine learning techniques for power system analytics: A survey," *Energies*, vol. 14, no. 16, p. 4776, 2021.

[9] S. M. Miraftabzadeh, C. G. Colombo, M. Longo, and F. Foiadelli, "K-means and alternative clustering methods in modern power systems," *IEEE Access*, vol. 11, pp. 119 596–119 633, 2023.

[10] J. Wang, "An intuitive tutorial to gaussian processes regression," *Computing in Science & Engineering*, 2023.

[11] C. Cortes and V. Vapnik, "Support-vector networks," *Machine learning*, vol. 20, pp. 273–297, 1995.

[12] P. Eleftheriadis, S. Giazitzis, C. Ozmalatyalilar, S. Leva, and R. Zich, "An overview of data-driven methods for the state of health estimation," in *2023 IEEE International Conference on Environment and Electrical Engineering and 2023 IEEE Industrial and Commercial Power Systems Europe (EEEIC / ICPS Europe)*, 2023, pp. 1–6.

[13] C. Vidal, P. Malysz, P. Kollmeyer, and A. Emadi, "Machine learning applied to electrified vehicle battery state of charge and state of health estimation: State-of-the-art," *Ieee Access*, vol. 8, pp. 52 796–52 814, 2020.

[14] P. Eleftheriadis, S. Giazitzis, S. Leva, and E. Ogliari, "Transfer learning techniques for the lithium-ion battery state of charge estimation," *IEEE Access*, 2023.

[15] S. D.V.S.R., C. Badachi, and R. C. Green II, "A review on data-driven soc estimation with li-ion batteries: Implementation methods & future aspirationscrocioni2020li," *Journal of Energy Storage*, vol. 72, p. 108420, 2023.

[16] N. N. Alajlan and D. M. Ibrahim, "Tinyml: Enabling of inference deep learning models on ultra-low-power iot edge devices for ai applications," *Micromachines*, vol. 13, no. 6, 2022.

[17] A. Sabovic, M. Aernouts, D. Subotic, J. Fontaine, E. De Poorter, and J. Famaey, "Towards energy-aware tinyml on battery-less iot devices," *Internet of Things*, vol. 22, p. 100736, 2023.

[18] M. Pavan, A. Caltabiano, and M. Roveri, "Tinyml for uwb-radar based presence detection," in *2022 International Joint Conference on Neural Networks (IJCNN)*, 2022, pp. 1–8.

[19] M. Roveri, "Is tiny deep learning the new deep learning?" in *Computational Intelligence and Data Analytics*, R. Buyya, S. M. Hernandez, R. M. R. Kovvur, and T. H. Sarma, Eds. Singapore: Springer Nature Singapore, 2023, pp. 23–39.

[20] P. Eleftheriadis, S. Giazitzis, S. Leva, and E. Ogliari, "State of health estimation of lithium-ion battery via bidirectional long short-term memory neural network with bayesian hyperparameter tuning," in *2023 IEEE International Conference on Energy Technologies for Future Grids (ETFG)*, 2023, pp. 1–6.

[21] G. Crocioni, D. Pau, J.-M. Delorme, and G. Gruosso, "Li-ion batteries parameter estimation with tiny neural networks embedded on intelligent iot microcontrollers," *IEEE Access*, vol. 8, pp. 122 135–122 146, 2020.

[22] Y. Mazzi, H. Ben Sassi, A. Gaga, and F. Errahimi, "State of charge estimation of an electric vehicle's battery using tiny neural network embedded on small microcontroller units," *International Journal of Energy Research*, vol. 46, no. 6, pp. 8102–8119, 2022.

[23] C. Birkl, "Oxford battery degradation dataset 1," 2017.

[24] NASA. Li-ion battery aging datasets. [Online]. Available: https://data.nasa.gov/dataset/Li-ion-Battery-Aging-Datasets/uj5r-zjdb/about_data

[25] P. Eleftheriadis, "PoliMi-TUB dataset - LG 18650HE4 li-ion battery," 2024.

[26] P. Eleftheriadis, S. Leva, M. Gangi, A. V. Rey, A. Borgo, G. Coslop, E. Groppo, L. Grande, and M. Sedzik, "Second life batteries: Current regulatory framework, evaluation methods, and economic assessment," *IEEE Industry Applications Magazine*, 2023.

[27] P. Eleftheriadis, S. Leva, and E. Ogliari, "Bayesian hyperparameter optimization of stacked bidirectional long short-term memory neural network for the state of charge estimation," *Sustainable Energy, Grids and Networks*, vol. 36, p. 101160, 2023.

[28] I. Goodfellow, Y. Bengio, and A. Courville, *Deep Learning*. MIT Press, 2016.

Authorized licensed use limited to: International Institute of Information Technology-Raipur. Downloaded on January 27,2026 at 10:50:39 UTC from IEEE Xplore. Restrictions apply.